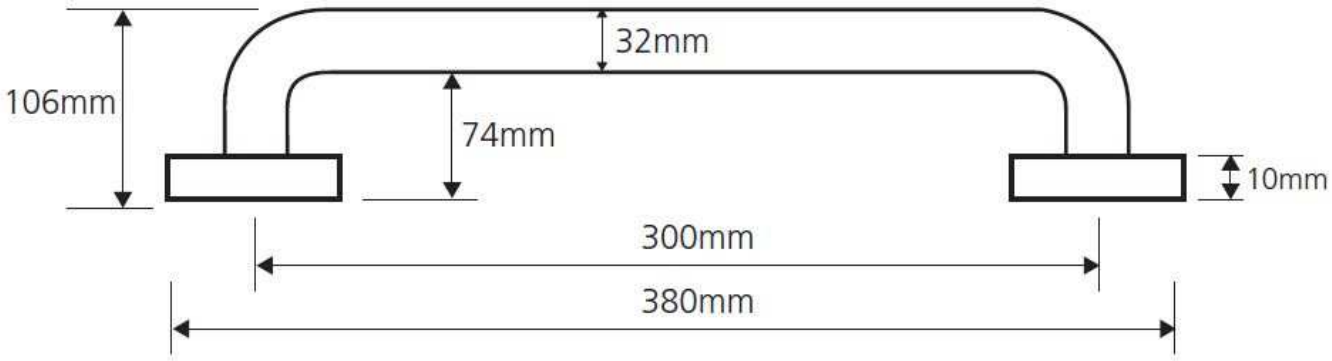
32mm
106mm
74mm
10mm
300mm
380mm

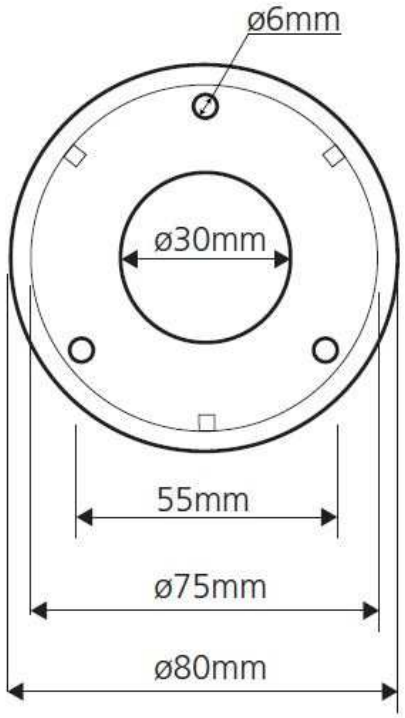
ø6mm
ø30mm
55mm
ø75mm
ø80mm