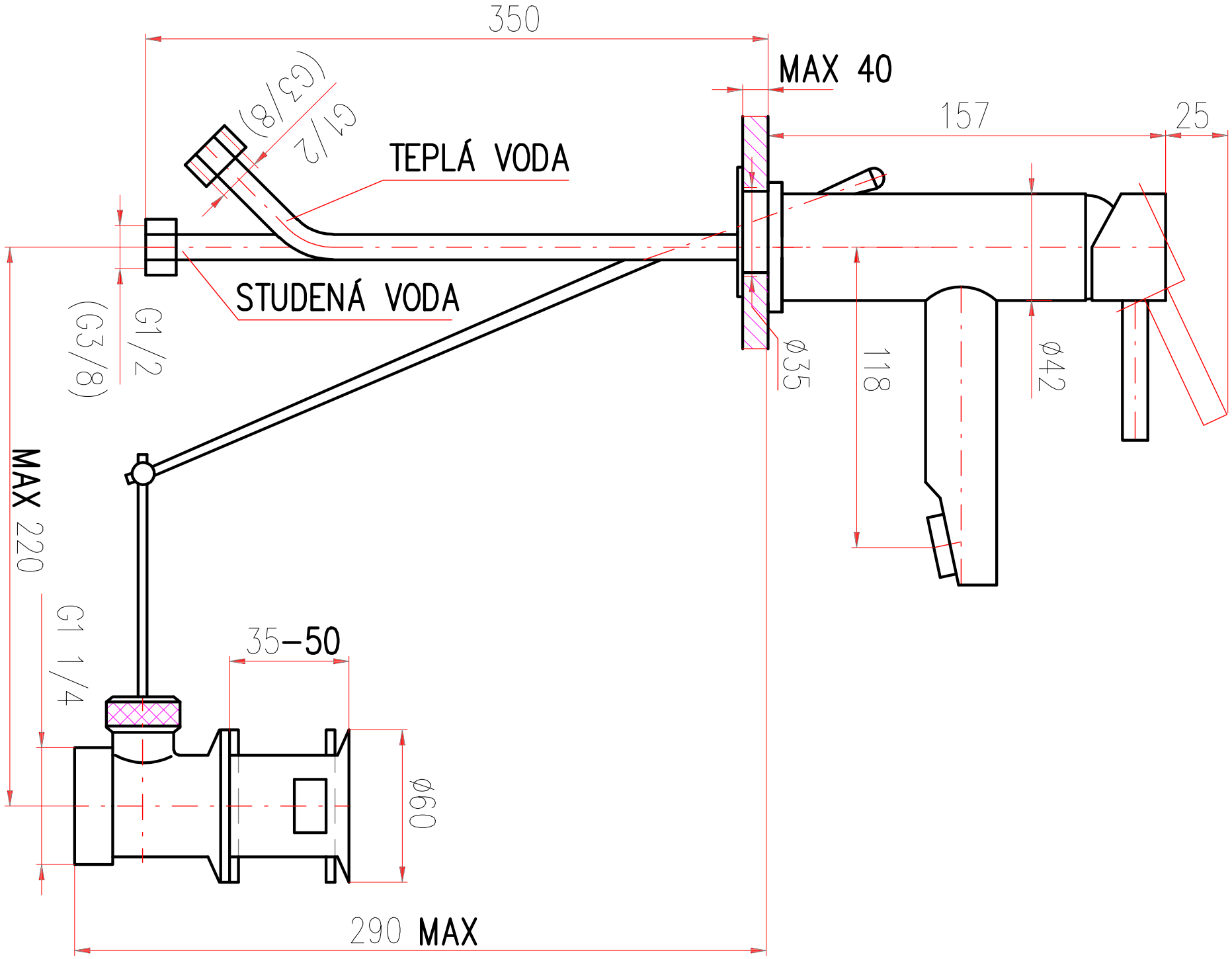
350
MAX 40
157
25
(G3/8)
G1/2
TEPLÁ VODA
STUDENÁ VODA
G1/2
(G3/8)
MAX 220
ø35
118
ø42
G1 1/4
35–50
ø60
290 MAX